Provincial Government
Sudurpaschim Province
Ministry of Social Development
Dhangadhi, Kailali

FINAL REPORT

Detail Engineering Design & Cost Estimate of Two Room Two Storey School Building (Terai Region)

DRAWING REPORT

Volume II

Submitted By:

2076 B.S.

Durga Engineering Construction and Consult Nepal Pvt. Ltd.

Doti

DECCN

Scanned by CamScanner

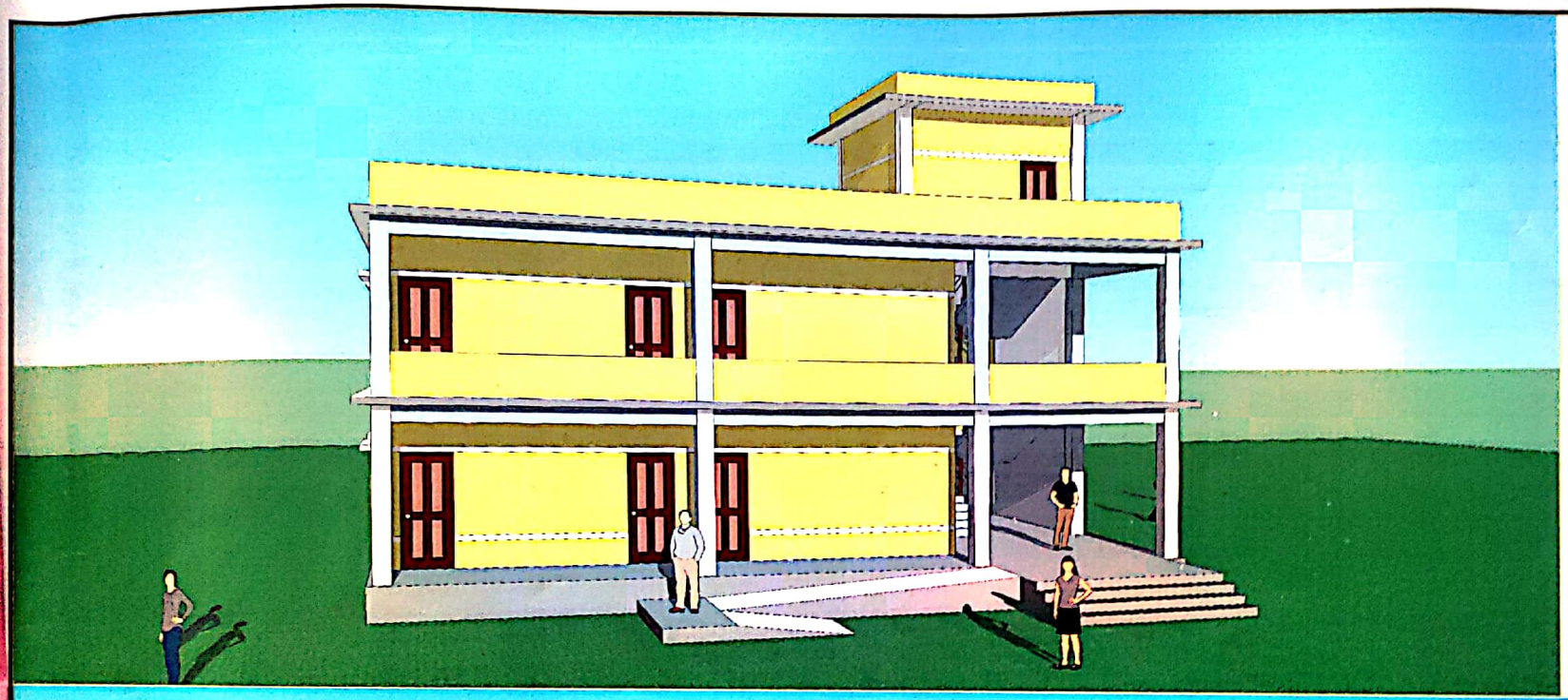

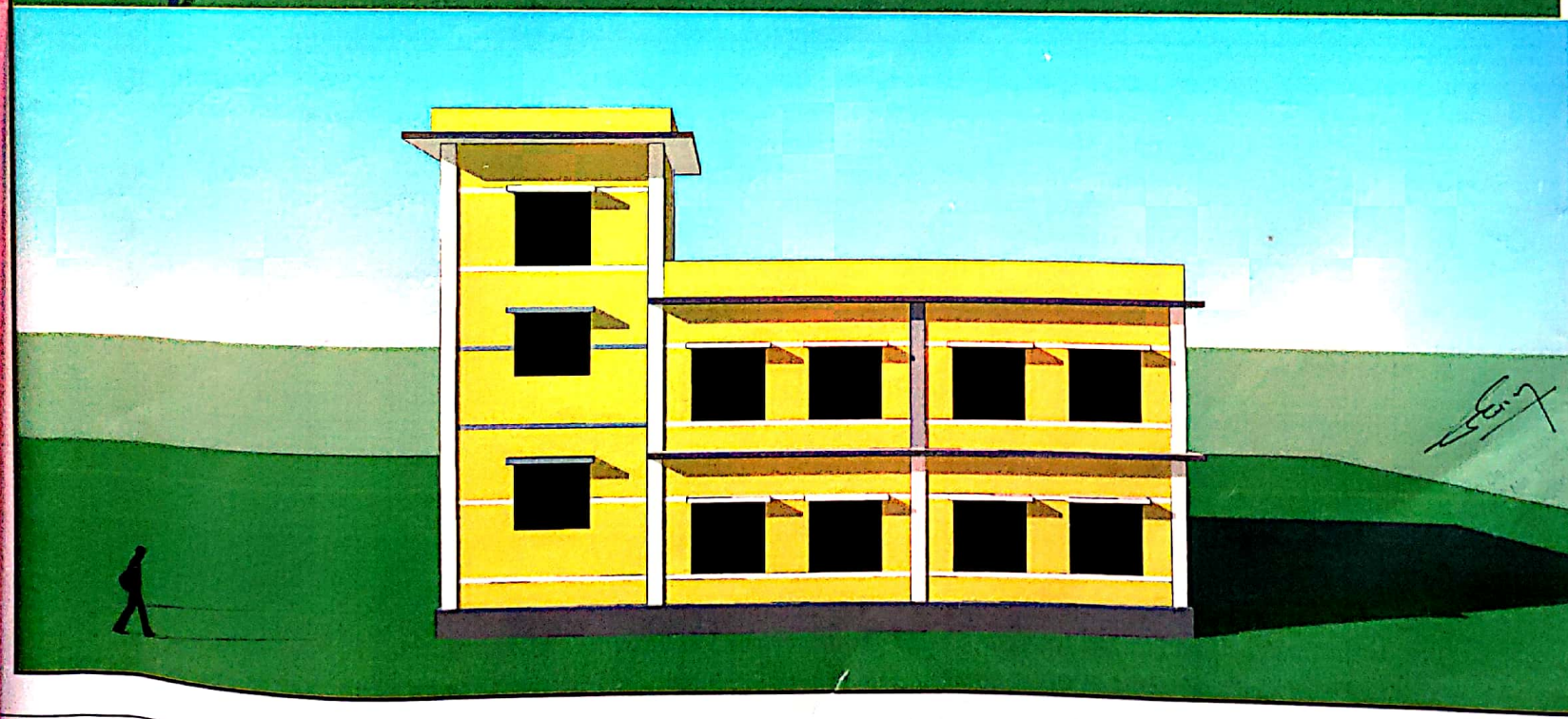

Er. Upendra Prasad Bhatta
NEC Regd. No: 13339"Civil"
Category: "A"

डिभिजनल इन्जिनियर

Two Storey Sap analysis

CLIENT:

Provincial Government
Sudurpashim Provience
Ministry of Social Development
Dhangadhi Kailali .

Name Of Consultant :

Durga Engineering Construction
& Consult Nepal Pvt Ltd., Doti

Name Of Project: Two Room Two Storey School Building

Building Area:-	Checked By:
Firm's Stamp:	Drawan By:
Scale: 1" = 8'-0"	Details : FRONT & BACK ELEVATION
Date:- 2020	Sheet No:- A1

Scanned by CamScanner

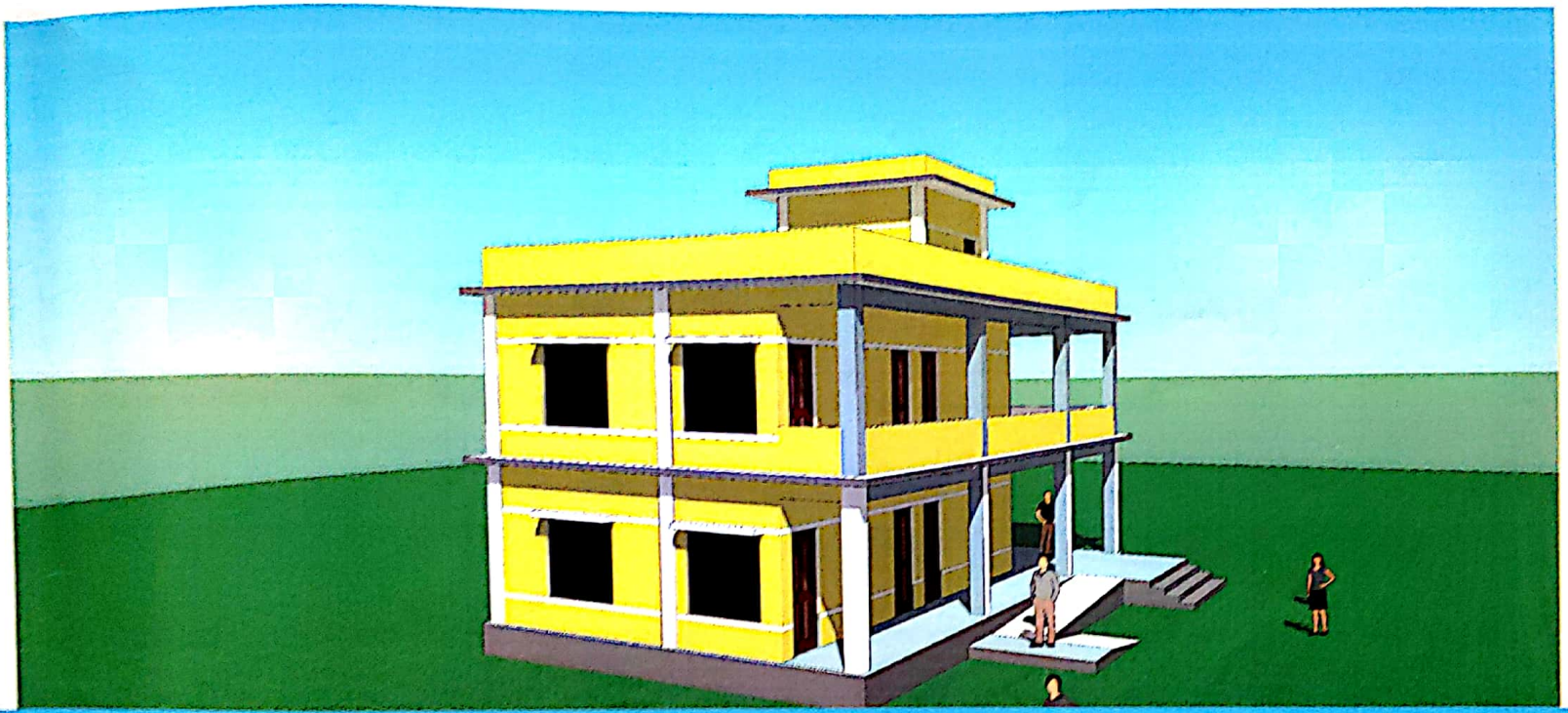

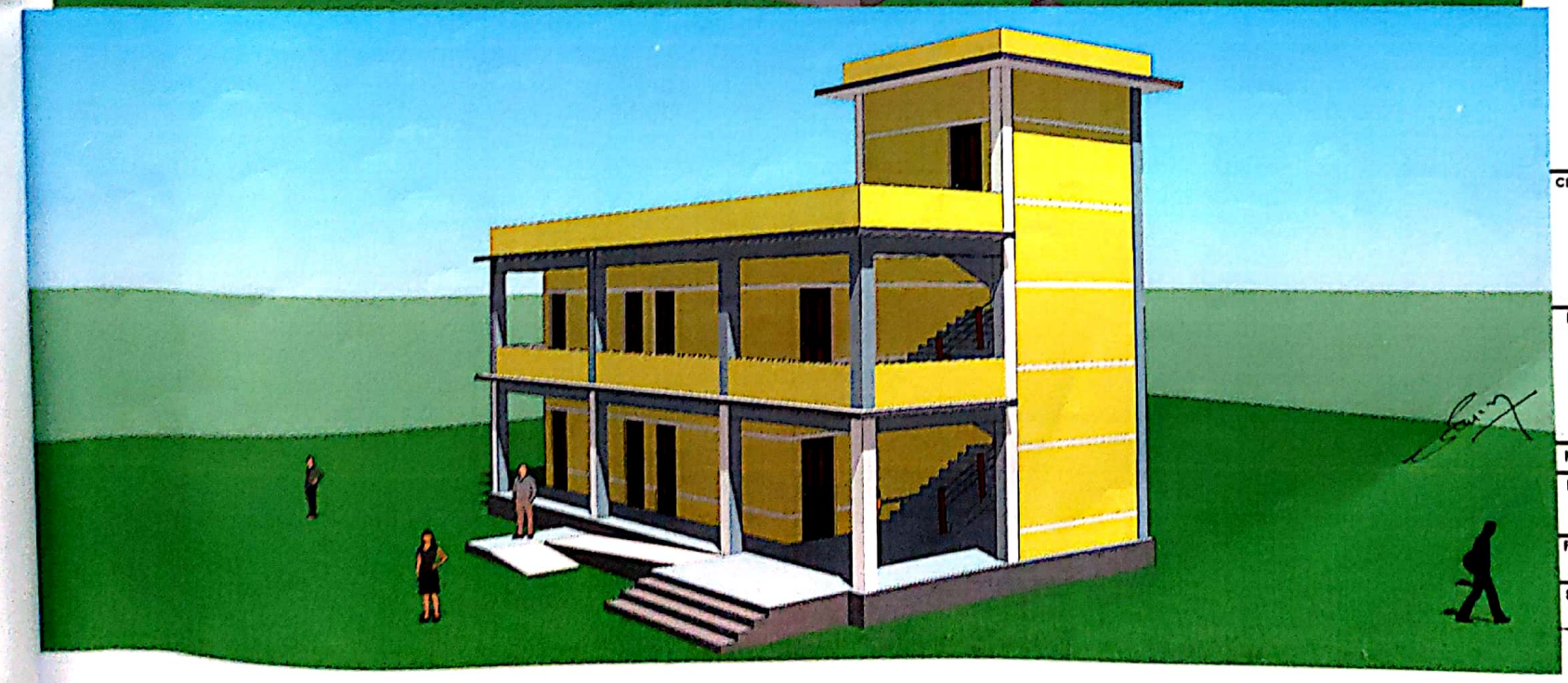

Ei. Upendra Prasad Bhatta
NEC Regd. No: 13339 CIVIL
Category: "A"

डिभिजनल इन्जिनियर

Two Storey Sep analysis

CLIENT:

Provincial Government
Sudurpashim Provience
Ministry of Social Development
Dhangadhi Kailali .

Name Of Consultant :

Durga Engineering Construction
& Consult Nepal Pvt Ltd., Doti

Name Of Project: Two Room Two Storey School Building

Building Area:-	Checked By:
Firm's Stamp:	Drawan By:
Scale: 1" = 8'-0"	Details : SIDE ELEVATION
Date:- 2020	Sheet No:- A2

Scanned by CamScanner

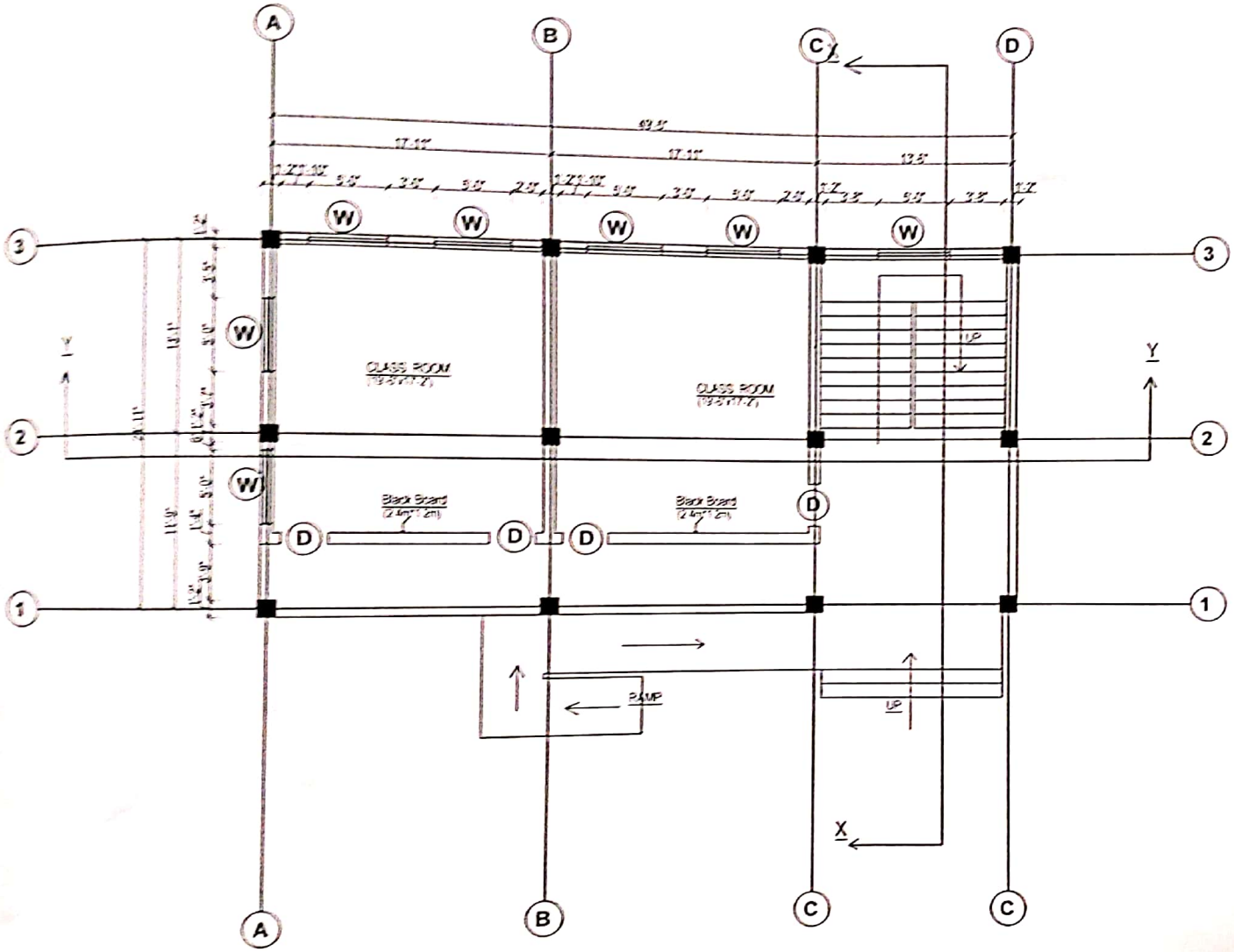

GROUND FLOOR PLAN

(AREA:-1318.18 SQ.FT)

FOR OFFICAL USE ONLY

Er. Upendra Prasad Bhatta
NEC Regd. No: 13339 Civil
Category: "A"

डिभिजनल इन्जिनियर

Two Storey Sap analysis

CLIENT:

Provincial Government
Sudurpashim Provience
Ministry of Social Development
Dhangadhi Kailali .

Name Of Consultant :

Durga Engineering Construction & Consult Nepal Pvt Ltd., Doti

Name Of Project: Two Room Two Storey School Building

Building Area:- 1318.18 square ft	Checked By: Er. Deepak upadhyay
Firm's Stamp:	Drawan By: Sudip Chaudhary
Scale: 1" = 8'-0"	Details : PLAN
Date:- 2020	Sheet No:- A I

Scanned by CamScanner

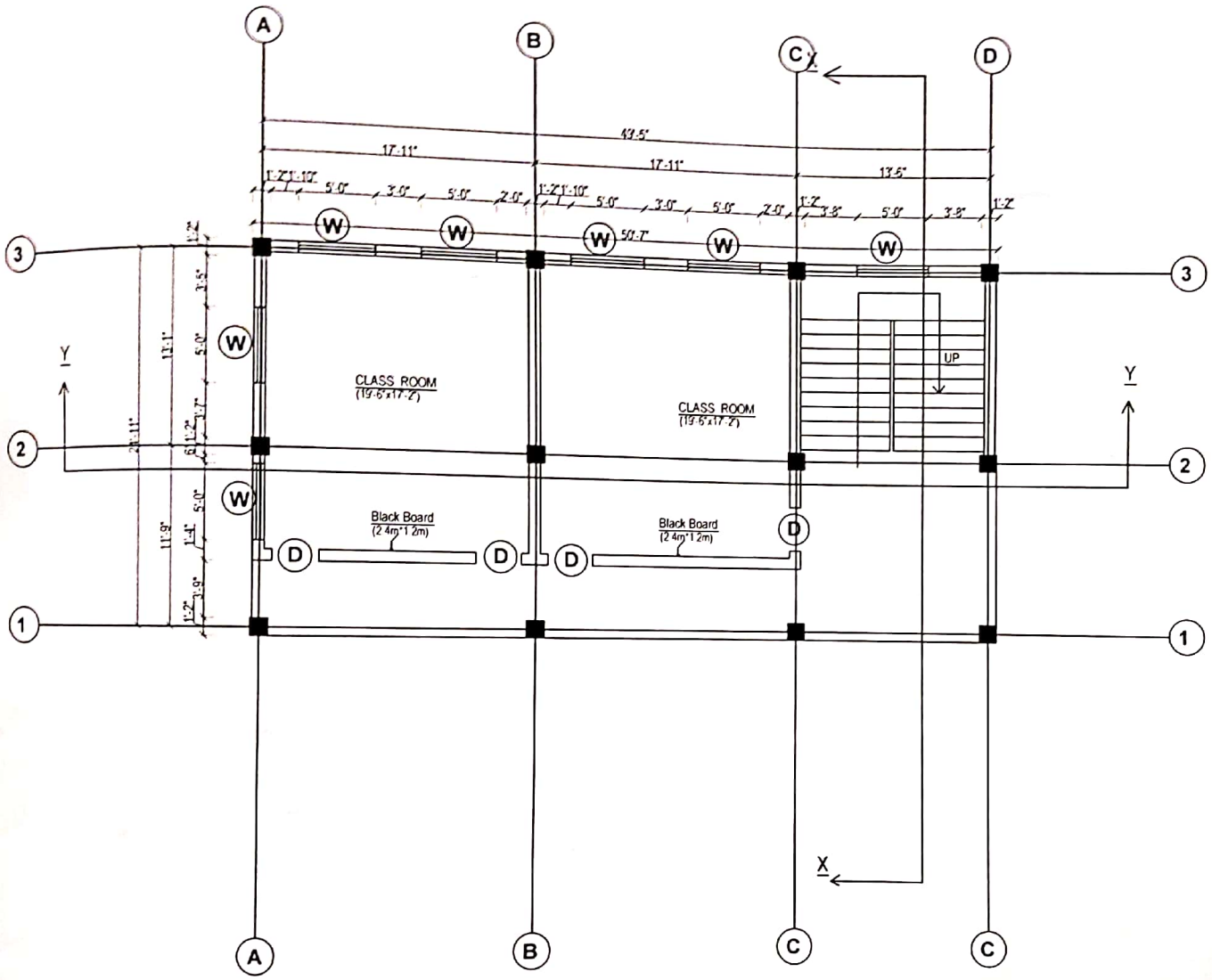

FIRST FLOOR PLAN

(AREA:-1318.98 SQ.FT)

FOR OFFICAL USE ONLY

Er. Upendra Prasad Bhatta
NEC Regd. No: 13339"Civil"
Category: "A"

डिभिजनल इन्जिनियर

Two Storey Sap analysis

CLIENT:

Provincial Government
Sudurpashim Provience
Ministry of Social Development
Dhangadhi Kailali .

Name Of Consultant :

Durga Engineering Construction
& Consult Nepal Pvt Ltd., Doti

Er. Deepak Upadhyay
NEC No. 16269 "Civil"
Category "A"

Name Of Project: Two Room Two Storey School Building	
Building Area:- 1318.18 square ft	Checked By: Er. Deepak upadhyay
Firm's Stamp:	Drawan By: Sudip Chaudhary
Scale: 1" = 8'-0"	Details : PLAN
Date:- 2020	Sheet No:- A2

Scanned by CamScanner

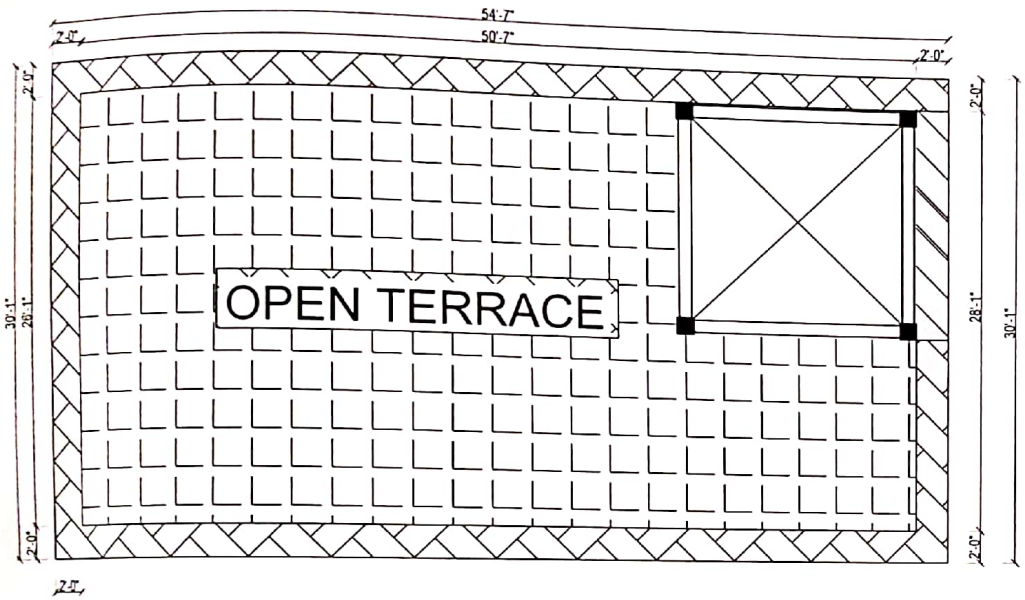

ROOF PLAN
Area of Building :- 1640.70 Sq.Ft.

OPENINGS SCHEDULE

S.N.	SYM.	PARTICULAR	WIDTH	HEIGHT	NOS.
1.	D	DOOR	3'-0"	7'-0"	9
2.	W	WINDOW	5'-0"	5'-0"	14

Er. Deepak Upadhyay
NEC No. 16269 "Civil"
Category "A"

FOR OFFICAL USE ONLY

Er. Upendra Prasad Bhatta
NEC Regd. No: 13339"Civil"
डिभिजनल इन्जिनियर

Two Storey Sap analysis

CLIENT:
Provincial Government
Sudurpashim Provience
Ministry of Social Development
Dhangadhi Kailali .

Name Of Consultant :
Durga Engineering Construction & Consult Nepal Pvt Ltd., Doti

Name Of Project: Two Room Two Storey School Building

Building Area:-	Checked By: Er. Deepak upadhyay
Firm's Stamp:	Drawan By: Sudip Chaudhary
Scale: 1" = 8'-0"	Details : Roof Plan
Date:- 2020	Sheet No:- A 3

Scanned by CamScanner

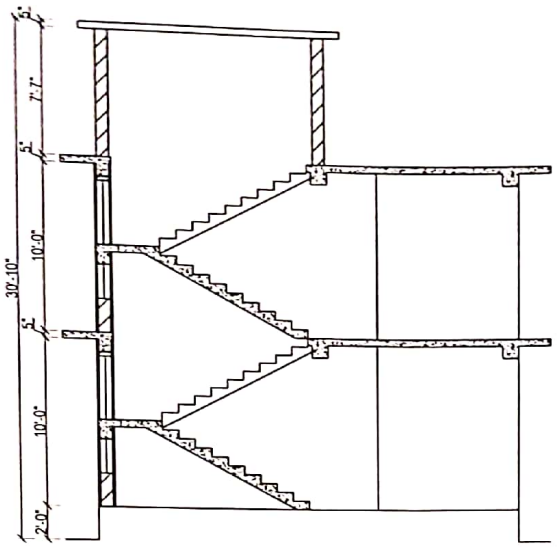

Section At X-X

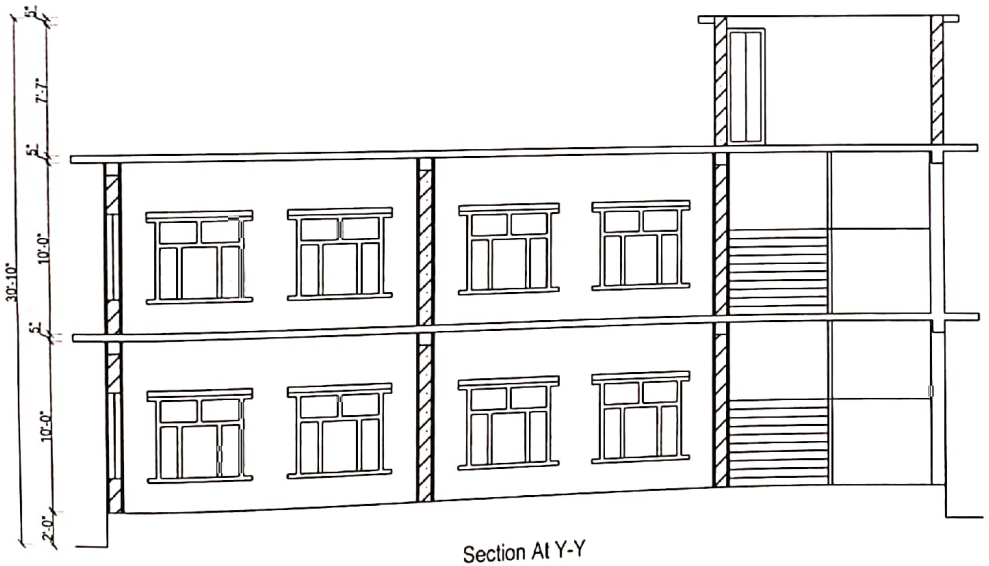

Section At Y-Y

Er. Deepak Upadhyay
NEC No. 16269 "Civil"
Category "A"

FOR OFFICAL USE ONLY

Er. Upendra Prasad Bhatta
NEC Regd. No: 13339"Civil"
Category: "A"

डिभिजनल इन्जिनियर

Two Storey Sap analysis

CLIENT:

Provincial Government
Sudurpashim Provience
Ministry of Social Development
Dhangadhi Kailali .

Name Of Consultant:

Durga Engineering Construction & Consult Nepal Pvt Ltd., Doti

Name Of Project: Two Room Two Storey School Building

Building Area:-	Checked By: Er. Deepak upadhyay
Firm's Stamp:	Drawan By: Sudip Chaudhary
Scale: 1" = 8'-0"	Details : Section Elevation
Date:- 2020	Sheet No:- A 4

Scanned by CamScanner

FRONT SIDE

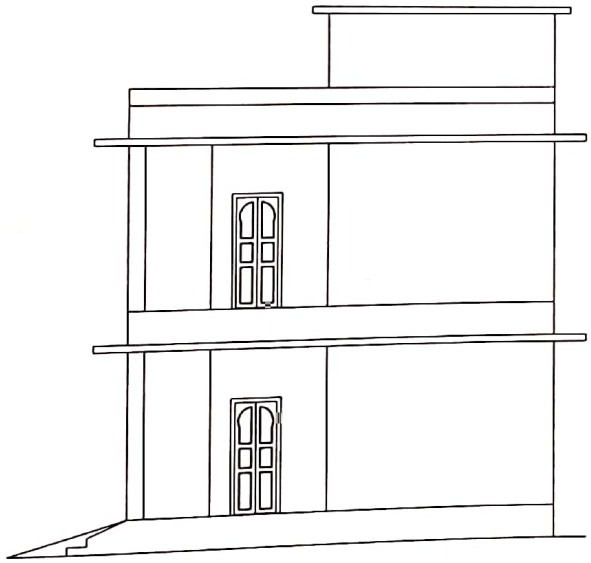

RIGHT SIDE

FOR OFFICAL USE ONLY

Er. Upendra Prasad Bhatta
NEC Regd. No: 13339"Civil"

डिभिजनल इन्जिनियर

Two Storey Sap analysis

CLIENT:

Provincial Government
Sudurpashim Provience
Ministry of Social Development
Dhangadhi Kailali .

Name Of Consultant :

Durga Engineering Construction & Consult Nepal Pvt Ltd., Doti

Er. Upadhyay
NEC No. 15265 Civil
Category "A"

Name Of Project: Two Room Two Storey School Building

Building Area:-	Checked By: Er. Deepak upadhyay
Firm's Stamp:	Drawan By: Sudip Chaudhary
Scale: 1" = 8'-0"	Details : Elevation
Date:- 2020	Sheet No:- A 5

Scanned by CamScanner

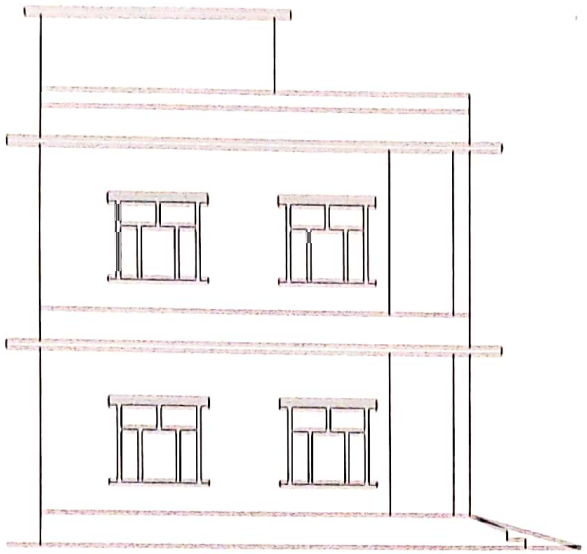

LEFT SIDE

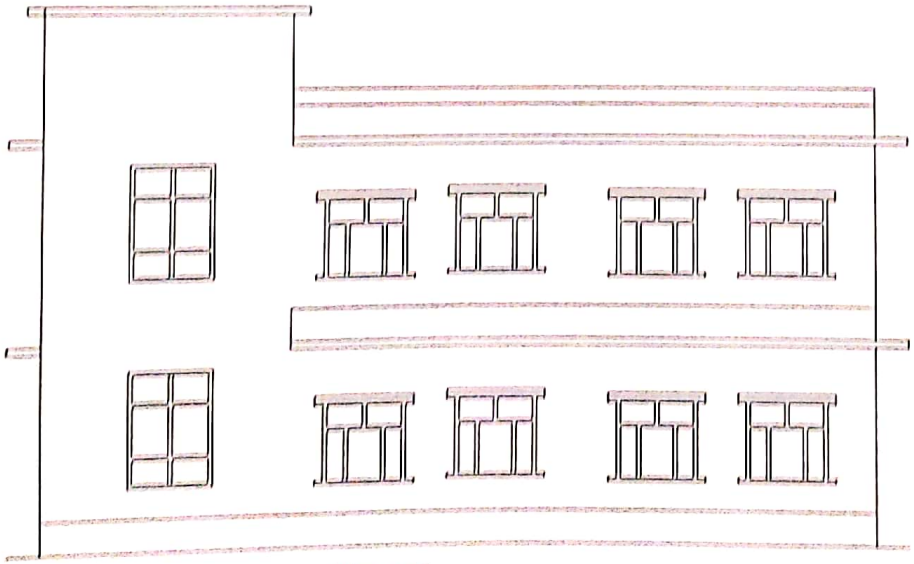

BACK SIDE

FOR OFFICAL USE ONLY

Two Storey Sap analysis

CLIENT:

Provincial Government
Sudurpashim Provience
Ministry of Social Development
Dhangadhi Kailali .

Name Of Consultant

Durga Engineering Construction
& Consult Nepal Pvt. Ltd. Doti

Name Of Project: Two Room Two Storey School Building

Building Area:	Checked By: Er. Deepak upadhyay
Firm's Stamp:	Drawn By: Sudip Chaudhary
Scale: 1" = 8'-0"	Details: Elevation
Date: 2020	Sheet No: A 6

Scanned by CamScanner

COLUMN DETAILS

Type	Ground floor	First floor
C1 14"*14"	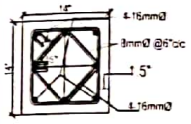	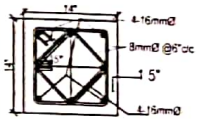
C2 14"*14"	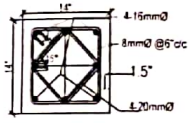	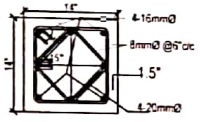

Note -

1) Concrete grade for all the R.C.C. work shall be of M20(1:1 ½:3)

2) Mortar mix for all brick works shall be 1:4

3) Minimum clear cover for slab, beam, column and foundation shall be 15mm, 25mm, 40mm and 50mm respectively.

4) The Formwork should be removed only after 24 hours of Concreting. The curing of Columns should be carried properly by putting water on column surfaces for minimum 7 days. Jute bags can be used to cover the Column surfaces during curing to keep the surfaces wet.

5) Shear key of size 100 x 100 x 100 mm should be provided at the top surface of the Column to avoid cold joint between old and new concrete and to strengthen the Column.

6) According to soil type round the foundation, it is adopted for medium foundation according to NBC 205.

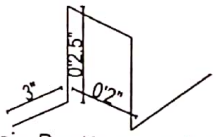

8mm dia Chair Resting on bottom bors

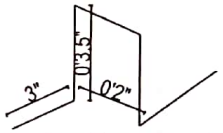

8mm dia Chair Resting on Slab formworks

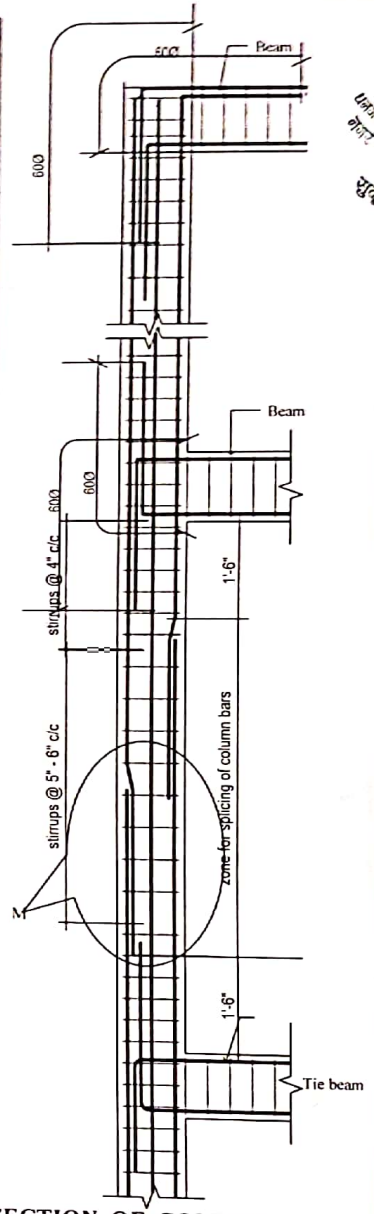

L- SECTION OF COLUMN WITH LAPPING
Scale- (1" = 2'-0")

FOR OFFICAL USE ONLY

Er. Upendra Prasad Bhatta
Regd. No: 13339"Civil"
Category "A"
डिभिजनल इन्जिनियर

Two Storey Sap analysis

CLIENT:
Provincial Government
Sudurpashim Provience
Ministry of Social Development
Dhangadhi Kailali .

Name Of Consultant :
Durga Engineering Construction & Consult Nepal Pvt Ltd., Doti

Name Of Project: Two Room Two Storey School Building

Building Area:-	Checked By: Er. Deepak upadhyay
Firm's Stamp:	Drawan By: Sudip Chaudhary
Scale: 1" = 8'-0"	Details : Structural
Date:- 2020	Sheet No:- S 7

Scanned by CamScanner

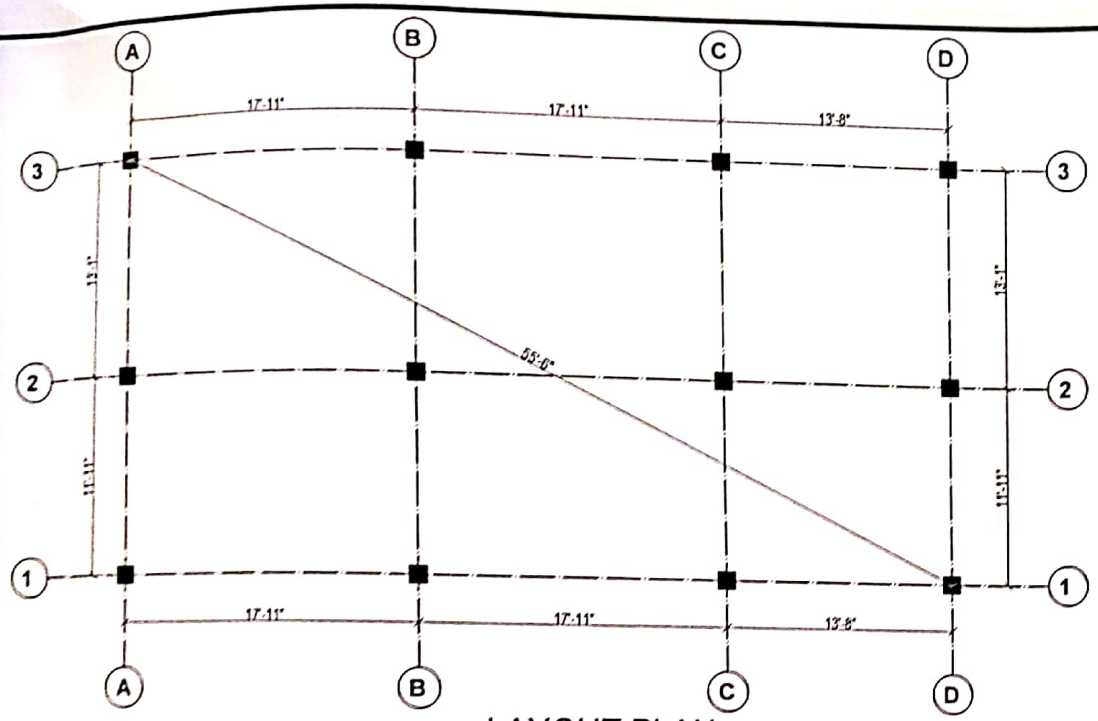

LAYOUT PLAN

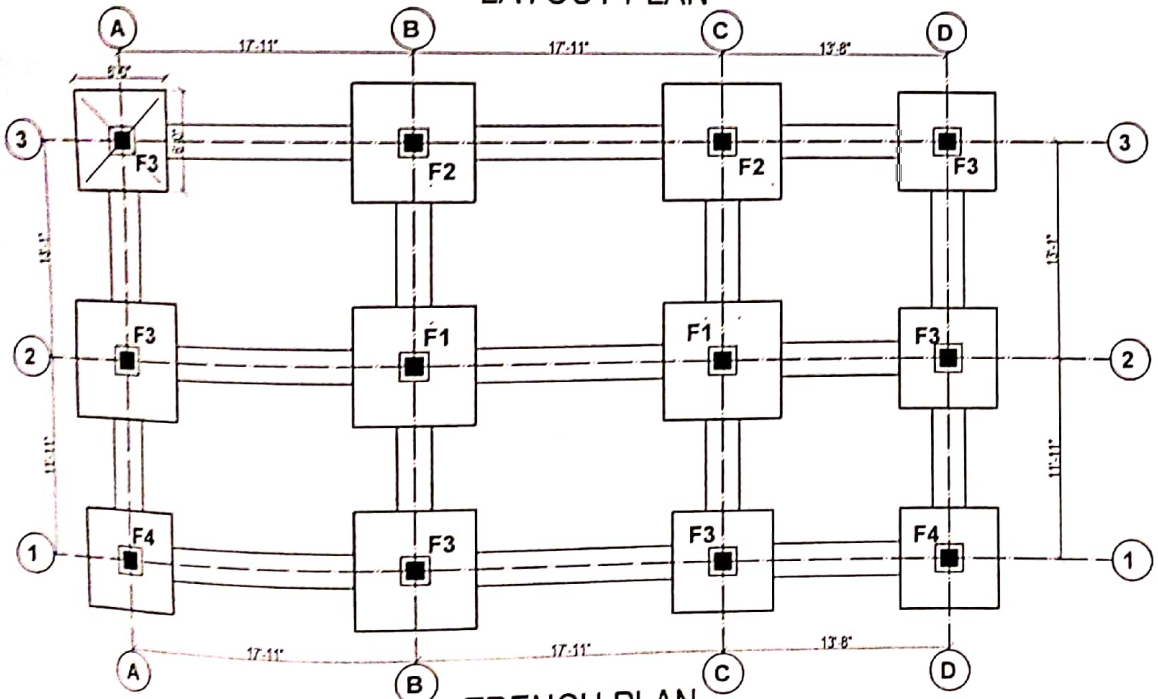

TRENCH PLAN

SBC=80KN/M2

S.N.	SYMBOL	SIZE	DEPTH
1.	F1	8'-6"*8'-6"	5'-0"
2.	F2	7'-6"*7'-6"	5'-0"
3.	F3	6'-6"*6'-6"	5'-0"
4.	F4	5'-0"*5'-0"	5'-0"

SBC=100KN/M2

S.N.	SYMBOL	SIZE	DEPTH
1.	F1	8'-0"*8'-0"	5'-0"
2.	F2	7'-0"*7'-0"	5'-0"
3.	F3	6'-0"*6'-0"	5'-0"
4.	F4	5'-0"*5'-0"	5'-0"

SBC=150KN/M2

S.N.	SYMBOL	SIZE	DEPTH
1.	F1	6'-0"*6'-0"	5'-0"
2.	F2	6'-0"*6'-0"	5'-0"
3.	F3	5'-0"*5'-0"	5'-0"
4.	F4	5'-0"*5'-0"	5'-0"

FOR OFFICAL USE ONLY

Er. Upendra Prasad Bhatta
NEC Regd. No: 13339"Civil"

डिभिजनल इन्जिनियर

Two Storey Sap analysis

CLIENT:

Provincial Government
Sudurpashim Provience
Ministry of Social Development
Dhangadhi Kailali .

Name Of Consultant :

Durga Engineering Construction & Consult Nepal Pvt Ltd., Doti

Name Of Project: Two Room Two Storey School Building

Building Area:-	Checked By: Er. Deepak upadhyay
Firm's Stamp:	Drawan By: Sudip Chaudhary
Scale: 1" = 8'-0"	Details : TRENCH PLAN
Date:- 2020	Sheet No:- S 8

Scanned by CamScanner

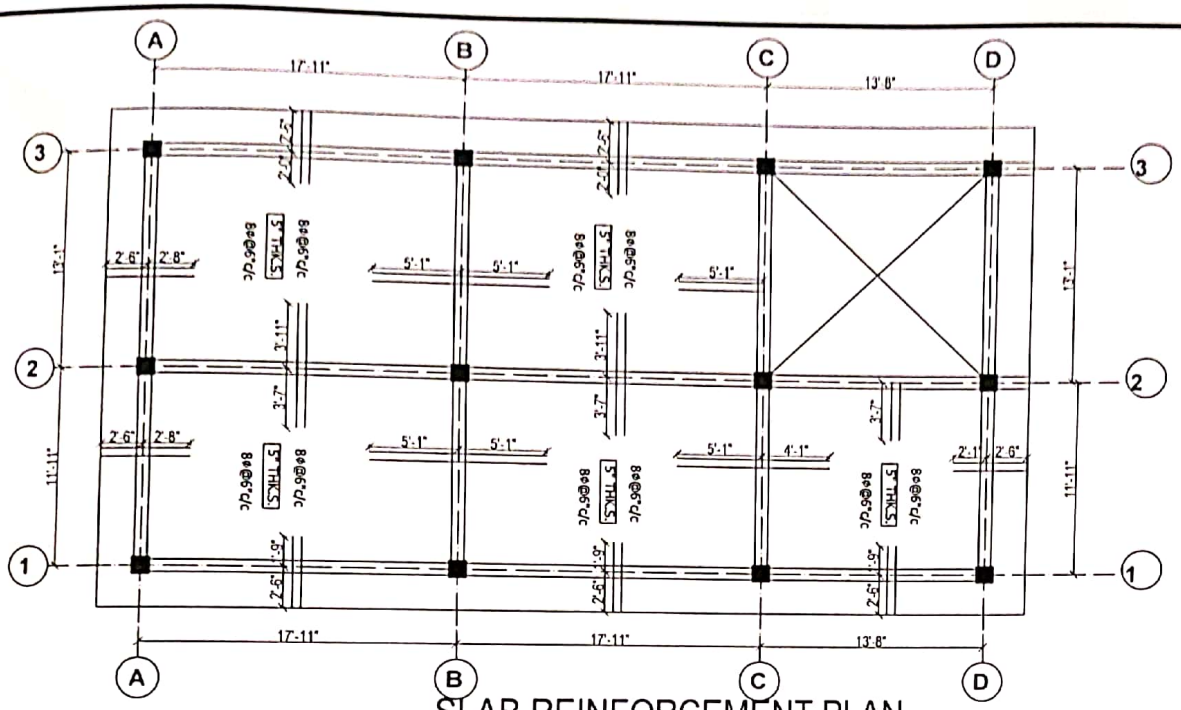

SLAB REINFORCEMENT PLAN

BEAM DETAILS

	MAIN BEAM	secondary beam
SIZE	9"x17"	9"x12"
TOP BAR	2-16Ø, 1-12Ø Th +2-12Ø Ex	2-12ThT/B
BOTTOM BAR	2-16Ø, 1-12Ø Th	2-12ThT/B

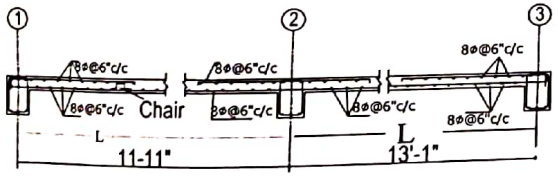

SLAB SECTION AT X-X
SCALE:1"= 4'

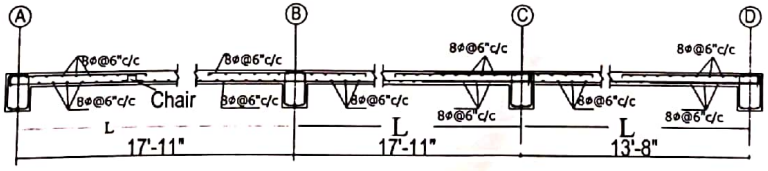

SLAB SECTION AT Y-Y
SCALE:1"= 4'

Er. Deepak Upadhyay
NEC No. 16269 Civil
Category "A"

FOR OFFICAL USE ONLY

Er. Upendra Prasad Bhatt
NEC Regd. No: 13339 Civil
Category: "A"

डिभिजनल इन्जिनियर

Two Storey Sap analysis

CLIENT:
Provincial Government
Sudurpashim Provience
Ministry of Social Development
Dhangadhi Kailali .

Name Of Consultant:
Durga Engineering Construction & Consult Nepal Pvt. Ltd., Doti

Name Of Project: Two Room Two Storey School Building

Building Area:-	Checked By: Er. Deepak upadhyay Nec Regd No. 16269 civil A
Firm's Stamp:	Drawan By: Sudip Chaudhary
Scale: 1" = 8'-0"	Details : SLAB DETAILS
Date:- 2020	Sheet No:- S 9

Scanned by CamScanner

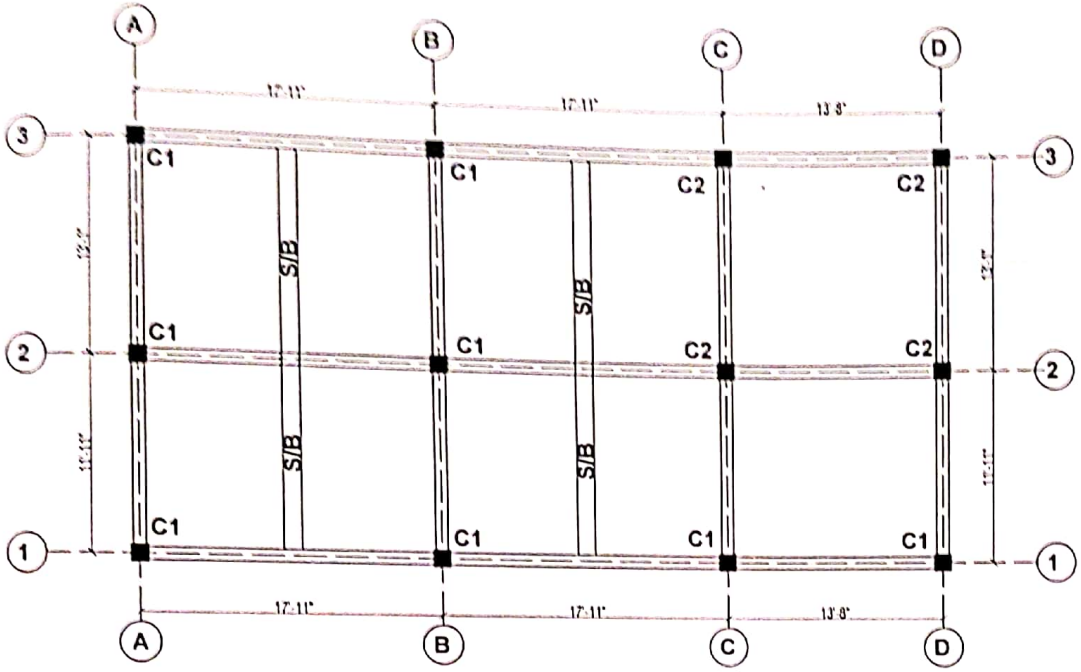

COLUMN BEAM PLAN

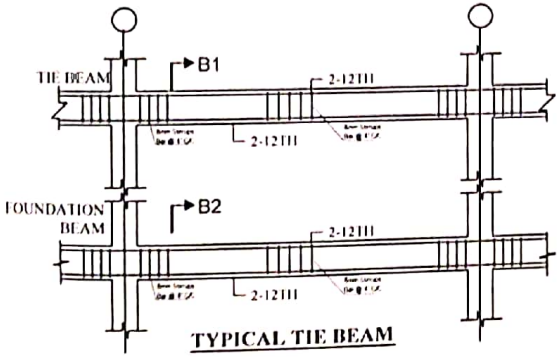

TYPICAL TIE BEAM

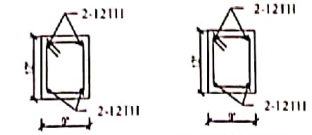

SECTION OF FOUNDATION TIE BEAM AT B2-B2

SECTION OF PLINTH TIE BEAM AT B1-B1

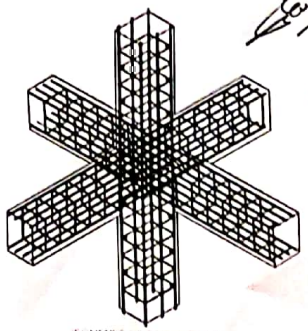

ISOMETRIC OF COLUMN BEAM JOINT REINFORCEMENT DETAIL

FOR OFFICAL USE ONLY

Er. Upendra Prasad Bhatta
NEC Regd. No: 13339"Civil"
Category: "A"

डिभिजनल इन्जिनियर

Two Storey Sap analysis

CLIENT:

Provincial Government
Sudurpashim Provience
Ministry of Social Development
Dhangadhi Kailali .

Name Of Consultant :

Durga Engineering Construction & Consult Nepal Pvt Ltd., Doti

Er. Deepak Upadhyay
NEC No. 10250 "Civil"
Category "A"

Name Of Project: Two Room Two Storey School Building

Building Area:-	Checked By: Er. Deepak upadhyay
Firm's Stamp:	Drawan By: Sudip Chaudhary
Scale: 1" = 8'-0"	Details : COLUMN BEAM PLAN
Date:- 2020	Sheet No:- S 10

Scanned by CamScanner

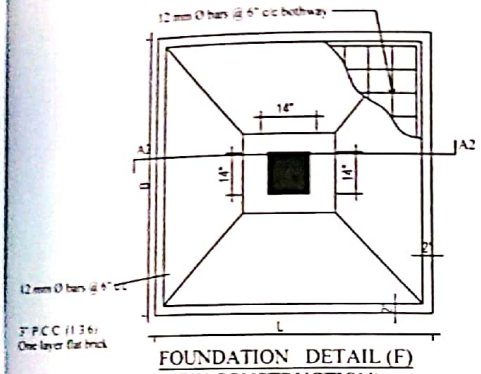

FOUNDATION DETAIL (F)
(NEW CONSTRUCTION)

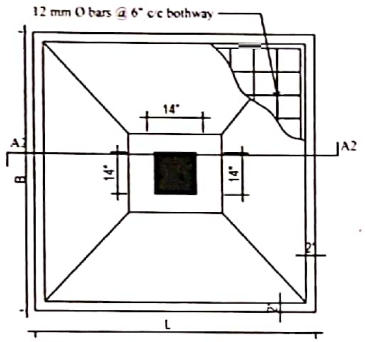

FOUNDATION DETAIL (F)

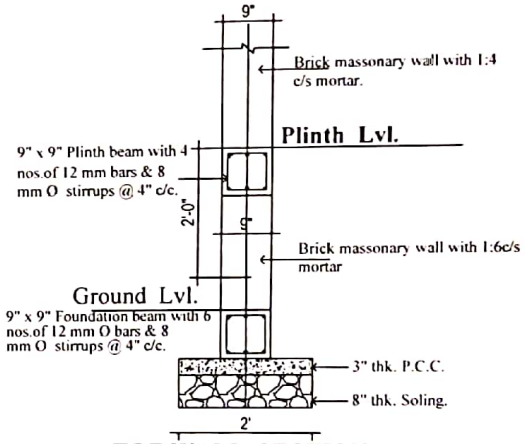

TOE WALL SECTION

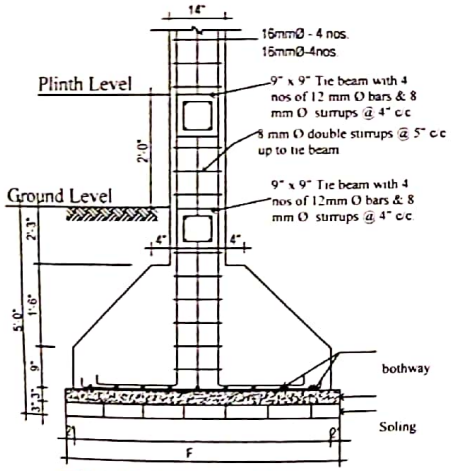

FOOTING DETAIL AT F1
(NEW CONSTRUCTION)

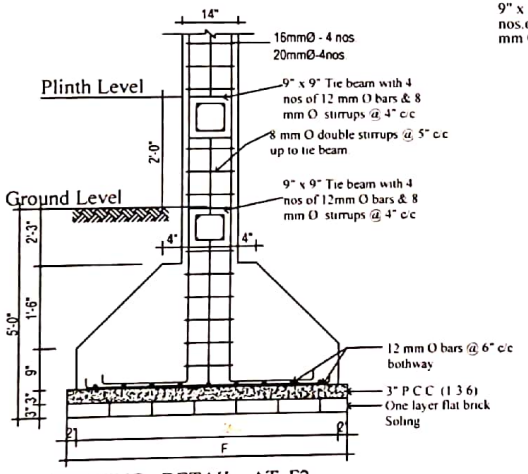

FOOTING DETAIL AT F2
(NEW CONSTRUCTION)

FOOTING ID	LxB	THICKNESS tm	REINFORCEMENT BOTH WAY
F1	8'-6"x8'-6"	1'-2"	12 MM DIA. @ 6" C/ C BOTH WAY
F2	7'-6"x7'-6"	1'-2"	12 MM DIA. @ 6" C/ C BOTH WAY
F3	6'-6"x6'-6"	1'-2"	12 MM DIA. @ 6" C/ C BOTH WAY
F4	5'-0"x5'-0"	1'-2"	12 MM DIA. @ 6" C/ C BOTH WAY

Er. Deepak Upadhyay
NEC No. 16159 'Civil'
Category "A"

FOR OFFICAL USE ONLY

Er. Upendra Prasad Bhatt
NEC Regd. No: 13339 'Civil'
Category: "A"

डिभिजनल इन्जिनियर

Two Storey Sap analysis

CLIENT:
Provincial Government
Sudurpashim Provience
Ministry of Social Development
Dhangadhi Kailali

Name Of Consultant:
Durga Engineering Construction & Consult Nepal Pvt Ltd, Doti

Name Of Project: Two Room Two Storey School Building

Building Area:-

Checked By: Er. Deepak upadhyay

Firm's Stamp:

Drawan By: Sudip Chaudhary

Scale: 1" = 8'-0"

Details : FOUNDATION DETAILS

Date:- 2020

Sheet No:- S 11

Scanned by CamScanner

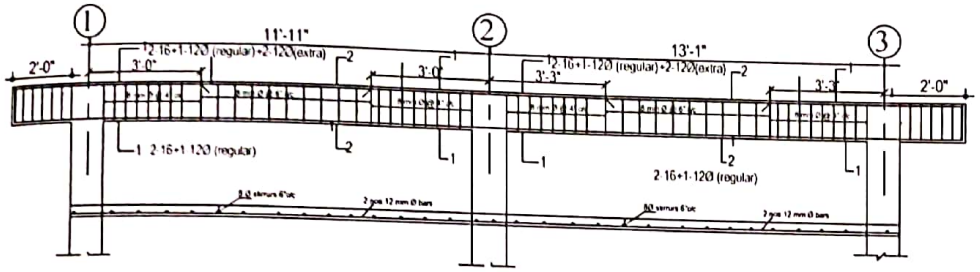

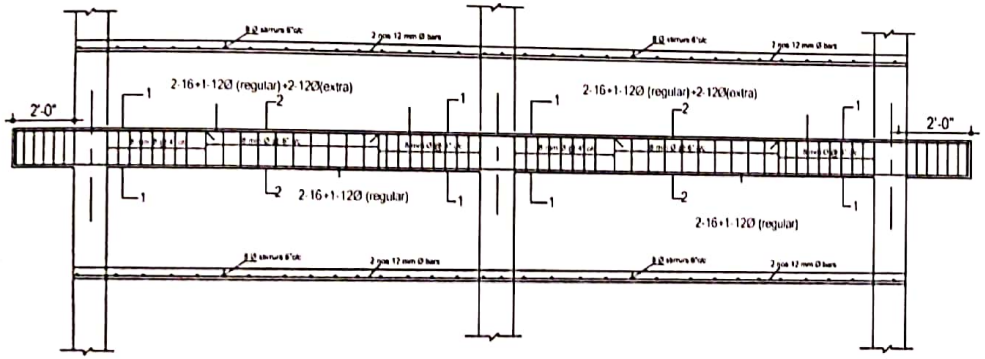

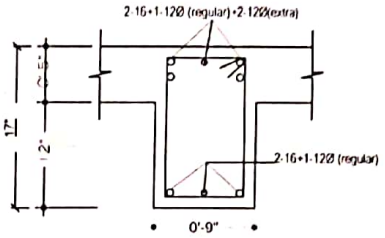

AT SECTION AT 1-1

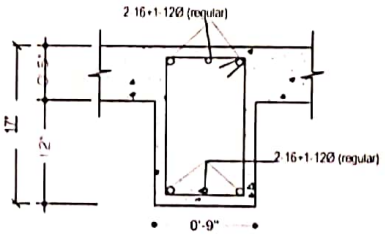

AT SECTION AT 2-2

TYPICAL BEAM SECTION ALONG GRID X-X

Er. Deepak Upadhyay
NEC No. 10203 Civil
Category "A"

FOR OFFICAL USE ONLY

Er. Upendra Prasad Bhatta
NEC Regd. No: 13339"Civil"
Category: "A"

डिभिजनल इन्जिनियर

Two Storey Sap analysis

CLIENT:

Provincial Government
Sudurpashim Provience
Ministry of Social Development
Dhangadhi Kailali .

Name Of Consultant:

Durga Engineering Construction & Consult Nepal Pvt Ltd., Doti

Name Of Project: Two Room Two Storey School Building

Building Area:-	Checked By: Er. Deepak upadhyay
Firm's Stamp:	Drawan By: Sudip Chaudhary
Scale: 1" = 8'-0"	Details: TYPICAL BEAM SECTION
Date:- 2020	Sheet No:- A (12)

Scanned by CamScanner

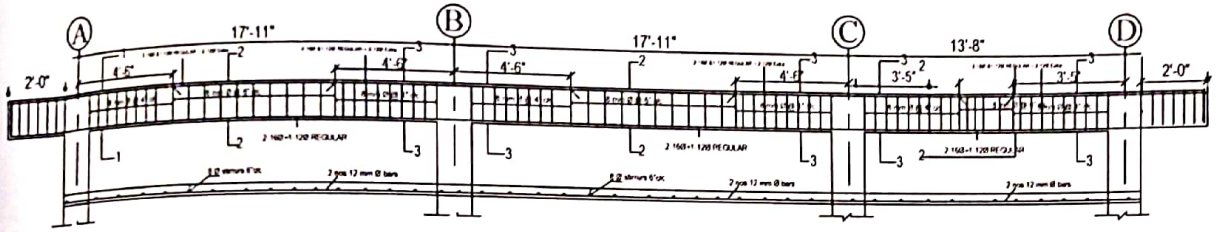

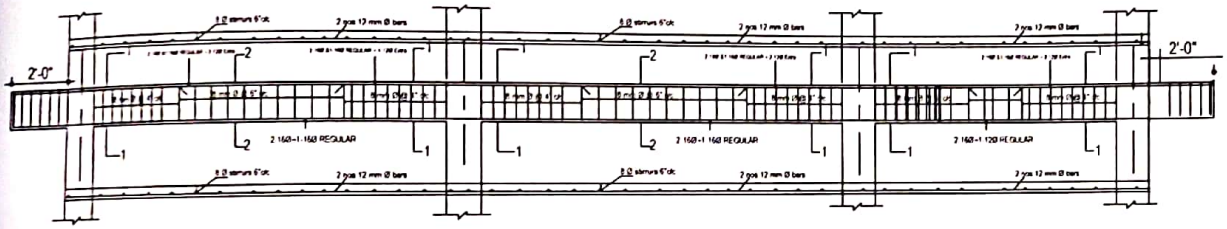

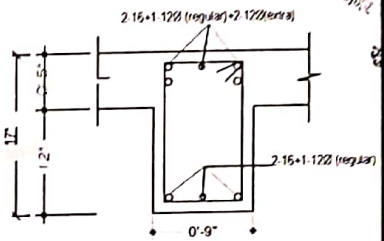

AT SECTION AT 1-1,3-3

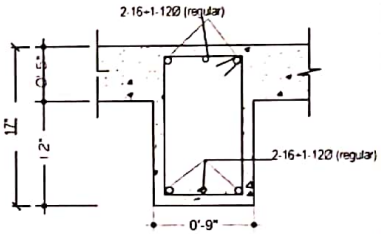

AT SECTION AT 2-2

FOR OFFICAL USE ONLY

Er. Upendra Prasad Bhatta
NEC Regd. No: 13339"Civil"
Category: "A"

डिभिजनल इन्जिनियर

Two Storey Sap analysis

CLIENT:

Provincial Government
Sudurpashim Provience
Ministry of Social Development
Dhangadhi Kailali .

Name Of Consultant :

Durga Engineering Construction & Consult Nepal Pvt Ltd., Doti

Er. Deepak Upadhyay
NEC No. 16269"C"
Category "A"

Name Of Project: Two Room Two Storey School Building	
Building Area:-	Checked By: Er. Deepak upadhyay
Firm's Stamp:	Drawan By: Sudip Chaudhary
Scale: 1" = 8'-0"	Details : TYPICAL BEAM SECTION
Date:- 2020	Sheet No:- S 13

Scanned by CamScanner

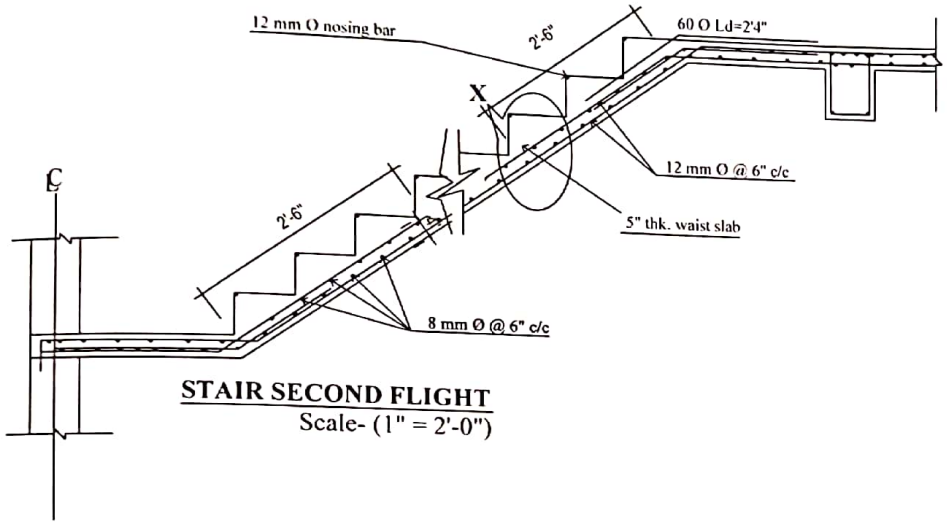

STAIR SECOND FLIGHT
Scale- (1" = 2'-0")

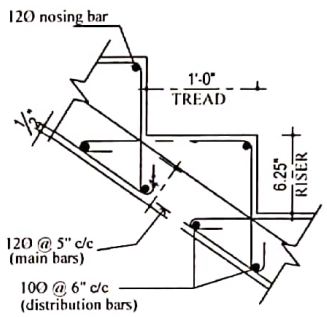

DETAIL AT X
SCALE:1"=1'-0'

TRADE = 1'-0"
RISE = 6.25"

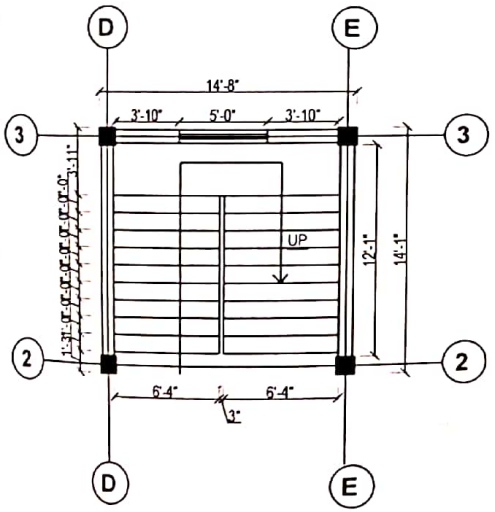

STAIRCASE PLAN
AREA :-207.52 SQFT

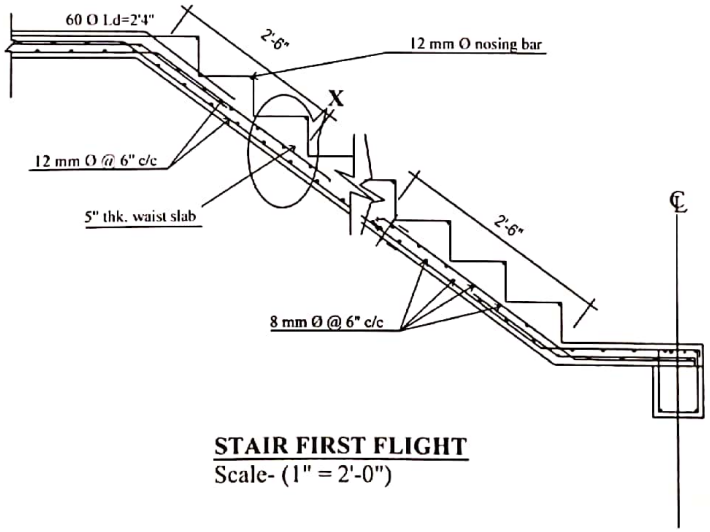

STAIR FIRST FLIGHT
Scale- (1" = 2'-0")

FOR OFFICAL USE ONLY

Er. Upendra Prasad Bhatta
NEC Regd. No: 13339"Civil"
Category: "A"
डिभिजनल इन्जिनियर

Two Storey Sap analysis

CLIENT:
Provincial Government
Sudurpashim Provience
Ministry of Social Development
Dhangadhi Kailali .

Name Of Consultant :
Durga Engineering Construction & Consult Nepal Pvt Ltd., Doti

Er. Deepak Upadhyay
NEC No. 16259 "Ci
Category "A"

Name Of Project: Two Room Two Storey School Building

Building Area:-	Checked By: Er. Deepak upadhyay
Firm's Stamp:	Drawan By: Sudip Chaudhary
Scale: 1" = 8'-0"	Details : STAIRCASE DETAILS
Date:- 2020	Sheet No:- S 14

Scanned by CamScanner

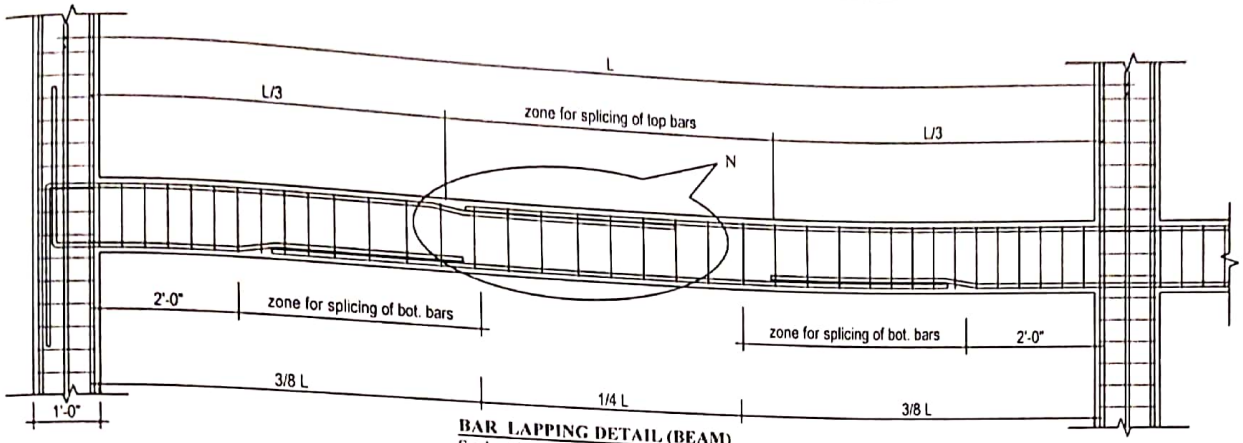

BAR LAPPING DETAIL (BEAM)
Scale- (1" = 2'-0")

TYPICAL PARAPET BAND DETAIL

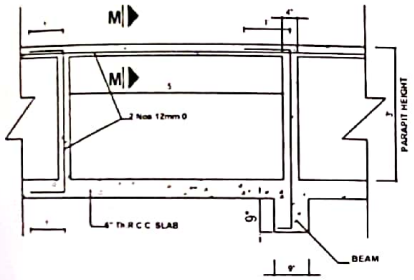

TYPICAL PARAPIT WALL DETAIL

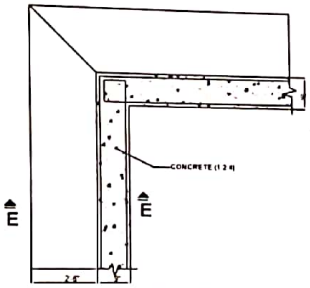

CORNER DETAIL
(PARAPIT)

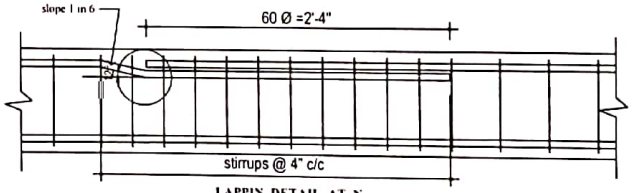

LAPPIN DETAIL AT N
(Scale-1" = 1'-0")

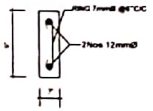

SECTION AT M-M

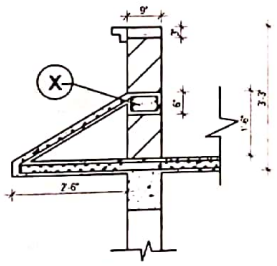

SECTION AT E-E

DETAIL AT X

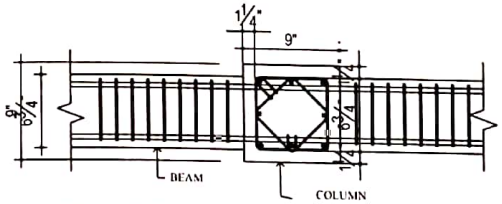

BEAM AND COLUMN JUNCTION DETAIL (12" x 12") COLUMN
(Scale-1" = 1'-0")

Er. Deepak Upadhyay
NEC No. 16269 "Civil"
Category "A"

FOR OFFICAL USE ONLY

Er. Upendra Prasad Bhatta
NEC Regd. No: 13339"Civil"
Category: "A"

डिभिजनल इन्जिनियर

Two Storey Sap analysis

CLIENT:

Provincial Government
Sudurpashim Provience
Ministry of Social Development
Dhangadhi Kailali .

Name Of Consultant :

Durga Engineering Construction & Consult Nepal Pvt Ltd., Doti

Name Of Project: Two Room Two Storey School Building

Building Area:-	Checked By: Er. Deepak upadhyay
Firm's Stamp:	Drawan By: Sudip Chaudhary
Scale: 1" = 8'-0"	Details : STRUCTURAL DETAILS
Date:- 2020	Sheet No:- S 15

Scanned by CamScanner

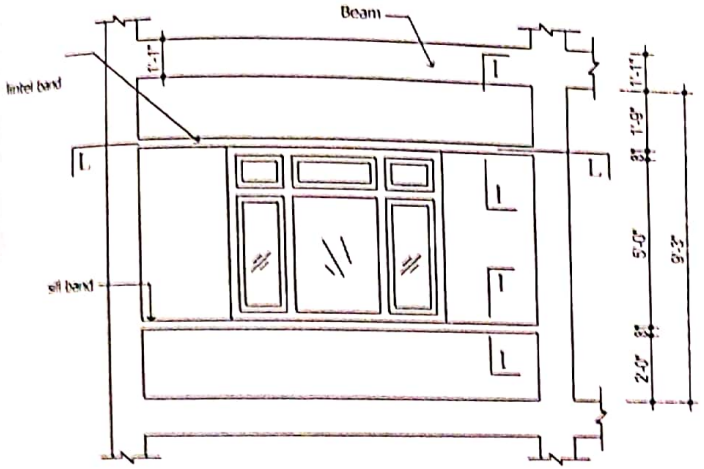

ELEVATION OF WALL
(Scale-1" = 4'-0")

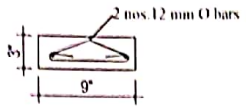

DETAIL OF SILL/PARAPET BAND AT L1
(Scale-1" = 1'-0")

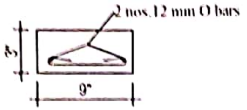

DETAIL OF LINTEL BAND AT L1
(Scale-1" = 1'-0")

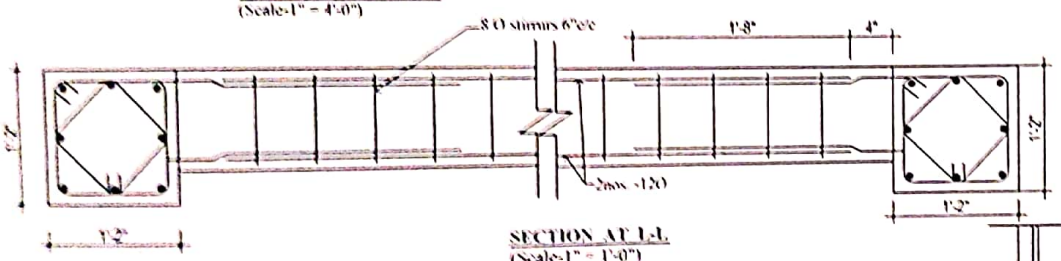

SECTION AT L-L
(Scale-1" = 1'-0")

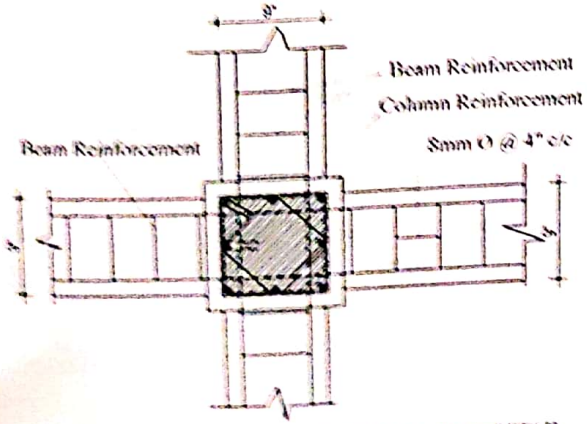

SECTIONAL PLAN OF BEAM COLUMN JOINT DETAIL
Scale-(1" = 1'-0")

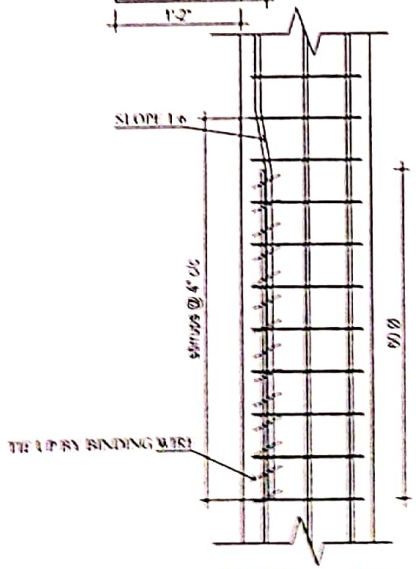

LAPPING DETAIL AT M
(Scale-1" = 1'-0")

FOR OFFICAL USE ONLY

Er. Upendra Prasad Bhatta
NEC Regd. No: 13339"Civil"
Category: "A"

डिभिजनल इन्जिनियर

Two Storey Sap analysis

CLIENT:
Provincial Government
Sudurpashim Provience
Ministry of Social Development
Dhangadhi Kailali .

Name Of Consultant:
Durga Engineering Construction & Consult Nepal Pvt Ltd., Doti

Name Of Project: Two Room Two Storey School Building

Building Area :-	Checked By: Er. Deepak Upadhyay
Firm's Stamp:	Drawn By: Sudip Chaudhary
Scale: 1" = 5'-0"	Details: STRUCTURAL DETAILS
Date:- 2020	Sheet No.: S-6

Scanned by CamScanner

Notes :-

1. Minimum concrete grade to be M20.
2. Grade of reinforcement steel to be FE415.
3. Cover to reinforcement shall not be less than 50mm in foundation, 40mm in column, 25mm in Beam and 20mm in Slab & Stair.
4. All lateral ties in column to be 8mm dia. at 100mm (4") centers.
5. All stirrups in Beam to be 2 legged 8 mm dia
6. Hooks in lateral ties and stirrups shall be bent at 135°and hook length shall not be less than 3.5".
7. Lapping of longitudinal reinforcement in columns shall be done at the mid hight in each story.
8. In Beam & Slab no bottom reinforcement shall be lapped near mid-span and no top reiinforcement shall be lapped near support.
9. All chairs in slab to be 12mm at 500mm.
10. Only written dimensions to be followed, drawings not to be measured.
11. Any discrepancy or omission in the drawing if found shall be reported immediately to the site engineer.

Er. Deepak Upadhyay
NEC No. 16269 "Civil"
Category "A"

FOR OFFICAL USE ONLY

Er. Upendra Prasad Bhatta
NEC Regd. No: 13339"Civil"
Category: "A"

डिभिजनल इन्जिनियर

Two Storey Sap analysis

CLIENT:
Provincial Government
Sudurpashim Provience
Ministry of Social Development
Dhangadhi Kailali .

Name Of Consultant:
Durga Engineering Construction & Consult Nepal Pvt Ltd., Doti

Name Of Project: Two Room Two Storey School Building

Building Area:-	Checked By: Er. Deepak upadhyay
Firm's Stamp:	Drawan By: Sudip Chaudhary
Scale: 1" = 8'-0"	Details : NOTES
Date:- 2020	Sheet No:- S 17

Scanned by CamScanner